LCD Kits Series

6.5" ~ 19" LCD Kits with OSD Function

RoHS Lead Free

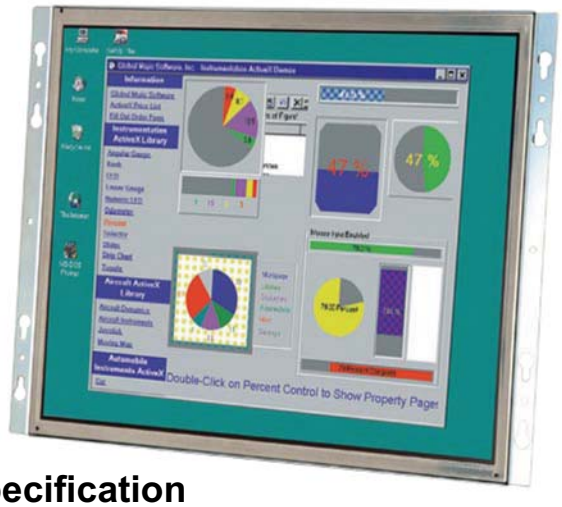

Features

- Robust chassis and retention kit structure for shocking and vibration requirement
- Over 300cd/m² high brightness and 50000hrs MTFB long lifetime panel
- Analog VGA interface supports most of general system boards

Specification

	LCD-KIT65G	LCD-KIT084G	LCD-KIT104G	LCD-KIT121G	LCD-KIT150G	LCD-KIT170G	LCD-KIT190G
LCD TYPE	6.5" TFT	8.4" TFT	10.4" TFT	12.1" TFT	15" TFT	17" TFT	19" TFT
Input Interface	VGA	VGA	VGA	VGA+DVI-D	VGA+DVI-D	VGA+DVI-D	VGA+DVI-D
Max Resolution	640 X 480	800 X 600	800 X 600	800 X 600	1024 x 768	1280 x1024	1280 x1024
Backlight MTBF	50000Hrs	20000Hrs	20000Hrs	50000Hrs	50000Hrs	50000Hrs	50000Hrs
Contrast	450:1	500:1	500:1	500:1	400:1	500:1	700:1
LCD Color	262K	262K	262K	262K	262K	16.2M	16.2M
Brightness (cd/m2)	400 500	220 450	230 400	400	350	300	300
INVERTER	7F700-LV12ETG-RS (400 cd/m2) 7F700-LV12EAG-RS (500 cd/m2)	7F700-LV1401TG-RS (220 cd/m2) 7F700-LCD19062C-RS(450 cd/m2)	7F700-PLCD0312101AG-RS(230 cd/m2) 7F700-PLCD02102G-RS(400 cd/m2)	7F700-QF82V4-RS	7F700-QF117V116-RS	7F700-PLCD2817418-RS	7F700-PLCD2817418-RS
AD BOARD	AV-9350	AV-5350	AV-5350	AV-5300	AV-5300	AV-5300	AV-5300
Adapter (12VDC output to LCD kit)	25W 63000-UP0251E12PL02-RS			45W 63000-UP0451E12P81L-RS			
Chassis	Heavy-duty steel	Heavy-duty steel	Heavy-duty steel	Heavy-duty steel	Heavy-duty steel	Heavy-duty steel	Heavy-duty steel
View Angle (H/V)	140/120	130/110 120/100	100/120	140/110	120/100	140/130	140/130
OSD function	Yes	Yes	Yes	Yes	Yes	Yes	Yes
Mounting	Panel	Panel	Panel	Panel	Panel	Panel	Panel
Dimenson (W)X(H)X(D) (mm)	203.4 x 121 x 34	234 x 147 x 35.3	242.2 x 209 x 33.6	294 x 240.7 x 42	364.1 x 262.5 x 41.9	390.4 x 300 x 46.9	427.9 x 327.4 x 48.4
Operation Temperature (°C)	0°C-50°C	0°C-50°C	0°C-50°C	0°C-50°C	0°C-50°C	0°C-50°C	0°C-50°C

Ordering Information

	Part No.	Description
6.5”	**LCD-KIT65G**	6.5" 400cd/m2 TFT LCD kit ,VGA input,RoHS
	LCD-KIT65GH	6.5" 500cd/m2 High Luminance TFT LCD kit, VGA input,RoHS
8.4”	**LCD-KIT084G**	8.4" 220cd/m2 TFT LCD kit, VGA input,RoHS
	LCD-KIT084GH	8.4" 450cd/m2 High Luminance TFT LCD kit, VGA input,RoHS
10.4”	**LCD-KIT104G**	10.4" 230cd/m2 TFT LCD kit, VGA input,RoHS
	LCD-KIT104GH	10.4" 400cd/m2 High Luminance TFT LCD kit, VGA input,RoHS
12.1”	**LCD-KIT121G**	12.1" 400cd/m2 TFT LCD kit, VGA and DVI-D input,RoHS
15”	**LCD-KIT150G**	15" 350cd/m2 TFT LCD kit, VGA and DVI-D input,RoHS
17”	**LCD-KIT170G**	17" 300cd/m2 TFT LCD kit, VGA and DVI-D input,RoHS
19”	**LCD-KIT190G**	19" 300cd/m2 TFT LCD kit, VGA and DVI-D input,RoHS

LCD-KIT65G

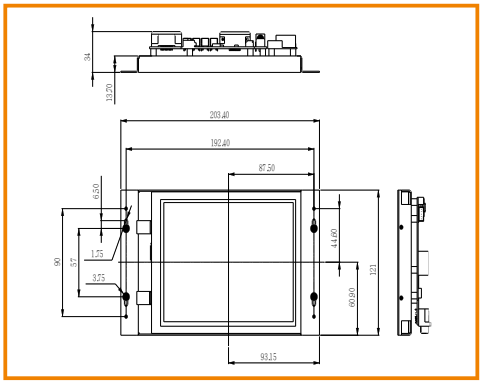

LCD-KIT084G

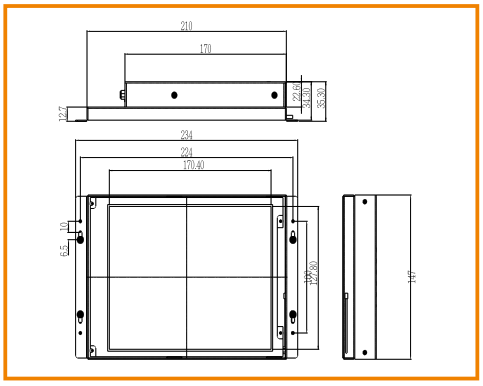

LCD-KIT104G

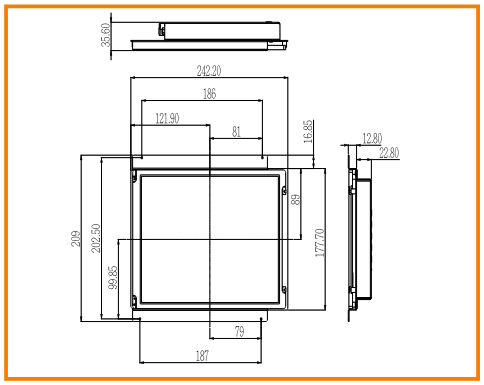

LCD-KIT121G

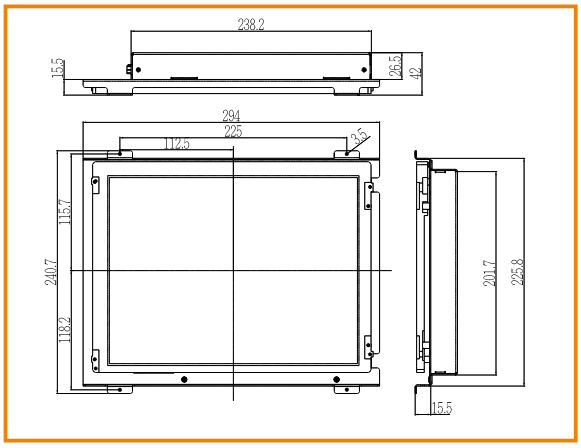

LCD-KIT150G

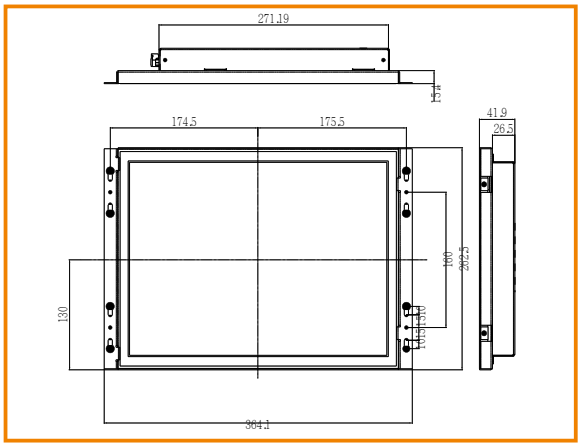

LCD-KIT170G

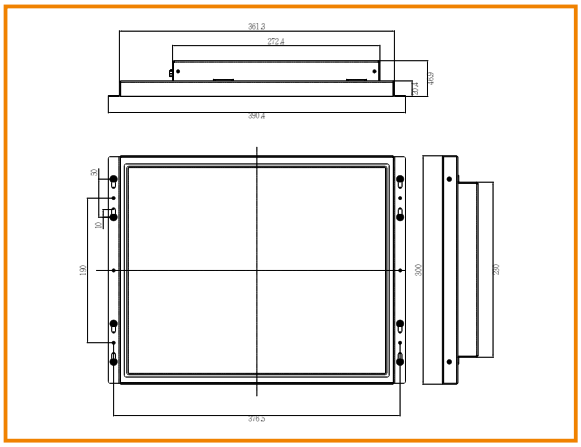
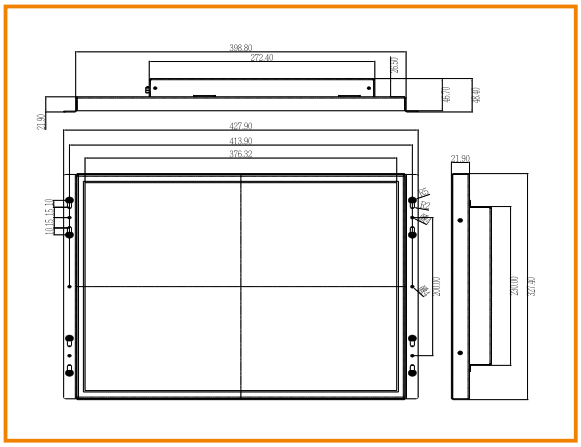
LCD-KIT190G