SPCIE-C2060

Full-size PICMG 1.3 CPU card Supports LGA1155 Intel® Xeon® E3 and Intel® Core™ i3/Pentium®/Celeron® CPU with Intel® C206, DDR3, VGA/DVI-D, Dual Intel® PCIe GbE, SATA 6Gb/s, PCIe Mini, HD Audio and RoHS

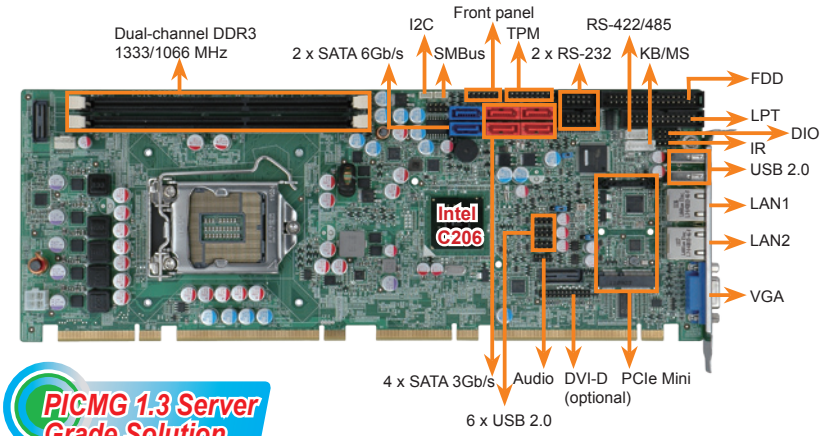

New

RAID Function Compatible with SATA 6Gb/s and SATA 3Gb/s

The latest SATA 6Gb/s connectors have double the speed of the SATA 3Gb/s interface.

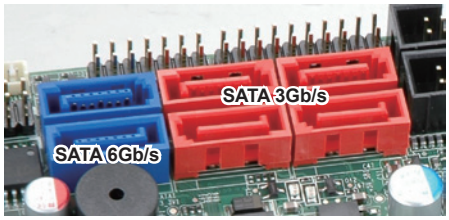

PICMG 1.3 Server Grade Solution

RAID | DDR3 1333 | Gigabit Ethernet PCIe GbE | SERIAL ATA SATA 6Gb/s | One Key Recovery iEi symantec.

TPM 1.2 Support

IO-KIT-001
DVI cable included in the DVI model

Specifications

- CPU
  LGA1155 socket supports LGA1155 Intel® Xeon® E3/Core™ i3/Pentium®/Celeron® processor
- System Chipset
  Intel® C206
- Memory
  Two 240-pin 1066/1333MHz dual-channel ECC and non-ECC unbuffered DDR3 SDRAM DIMMs supported (system max.16GB)
- BIOS
  UEFI BIOS
- Graphics Engine
  Intel® HD Graphics Gen 6 supports for DX10.1 and OpenGL 3.0
  Full MPEG2, VC1, AVC Decode
- Display Output
  1 x VGA
  1 x DVI-D (via header to IO-KIT-001-R20 DVI-D/USB module) (optional)
- Ethernet
  LAN1: Intel® 82574L PCIe controller
  LAN2: Intel® 82579 PHY with Intel® AMT 7.0 support
- Super I/O
  Fintek F81866
- I/O Interface
  2 x RS-232 1 x RS-422/485
  1 x LPT 1 x FDD
  8 x USB 2.0 (2 by rear IO, 6 by on-board pin header)
  1 x 6-pin wafer for KB/MS
  4 x SATA 3Gb/s (RAID 0/1/5/10 supported)
  2 x SATA 6Gb/s (RAID 0/1/5/10 supported)
- Front Panel
  1 x Front panel connector (power LED, HDD LED, speaker, power button, reset button)
- Audio
  Supports by IEI AC-KIT-888HD audio kit
- TPM
  1 x 20-pin header
- SMBus
  1 x 4-pin wafer
- I2C
  1 x 4-pin wafer
- Infrared Interface
  1 x 5-pin header
- Expansions
  PCIe signal and PCI signal via golden finger
  1 x PCIe Mini slot (with USB 1.1/2.0 signal)
- Watchdog Timer
  Software programmable supports 1~255 sec. system reset
- Digital I/O
  8-bit digital I/O (4-bit input, 4-bit output)
- Fan Connector
  1 x 4-pin smart Fan Connector
- Power Supply
  AT/ATX power supply supported
- Power Consumption
  5V@3.98A, 12V@0.38A, Vcore_12V@7.81A, 3.3V@1.61A, 5VSB@0.15A
  (3.4GHz Intel® Core™ i7-2600K with two 2GB 1333MHz DDR3 memory)
- Operating Temperature
  -10°C ~ 60°C
- Operating Humidity
  5% ~95%, non-condensing
- Dimensions
  338 mm x 126 mm
- Weight
  GW: 1200g/NW: 420g

Features

1. Full-size PICMG 1.3 server grade solution
2. LGA1155 Intel® Xeon® E3/Core™ i3/Pentium®/Celeron® processors supported
3. Up to 16 GB 1333 MHz dual-channel DDR3 SDRAM
4. Supports dual independent display by VGA and DVI-D (DVI model)
5. Supports PCIe Mini expansion
6. Intel® PCIe GbE with Intel® AMT 7.0 support
7. Supports RAID function via SATA 6Gb/s and SATA 3Gb/s
8. High-speed I/O Interface provided through the 2nd gen PCIe add-on card and SATA 6Gb/s connectors
9. TPM V1.2 hardware security provided by the TPM module
10. IEI One Key Recovery solution allows you to create rapid OS backup and recovery

Packing List

1 x SPCIE-C2060 single board computer	
1 x Dual RS-232 cable (P/N: 19800-000051-RS)	
4 x SATA cable (P/N: 32801-000703-200-RS)	1 x Mini jumper pack
1 x USB cable (P/N: 19800-003100-200-RS)	1 x Utility CD
1 x One Key Recovery CD	1 x QIG (Quick Installation Guide)

Ordering Information

Part No.	Description
SPCIE-C2060-R10	Full-size PICMG 1.3 CPU card supports 32nm LGA1155 Intel® Xeon® E3 and Intel® Core™ i3/Pentium®/Celeron® CPU with Intel® C206, DDR3, VGA, Dual Intel® PCIe GbE, SATA 6Gb/s, PCIe Mini, HD Audio and RoHS
SPCIE-C2060-DVI-R10	Full-size PICMG 1.3 CPU card supports 32nm LGA1155 Intel® Xeon® E3 and Intel® Core™ i3/Pentium®/Celeron® CPU with Intel® C206, DDR3, DVI-D, Dual Intel® PCIe GbE, SATA 6Gb/s, PCIe Mini, HD Audio and RoHS
32205-003800-100-RS	RS-422/485 cable, 200mm
19800-000075-RS	KB/MS cable with bracket
SAIDE-KIT01-R10	SATA to IDE/CF converter board
32102-000100-200-RS	SATA power cable
32229-000100-100-RS	FDD flat cable
32200-015100-RS	LPT cable
AC-KIT-888HD-R10	7.1 channel HD audio kit with Realtek ALC888 supports dual audio streams
CF-1156A-RS	High-performance LGA1155/LGA1156 cooler kit, 1U chassis compatible, 73W
CF-1156B-RS	High-performance LGA1155/LGA1156 cooler kit, 95W
CF-1156C-RS	LGA1155/LGA1156 cooler kit, 1U chassis compatible, 45W
CF-1156D-RS	LGA1155/LGA1156 cooler kit, 1U chassis compatible, 65W